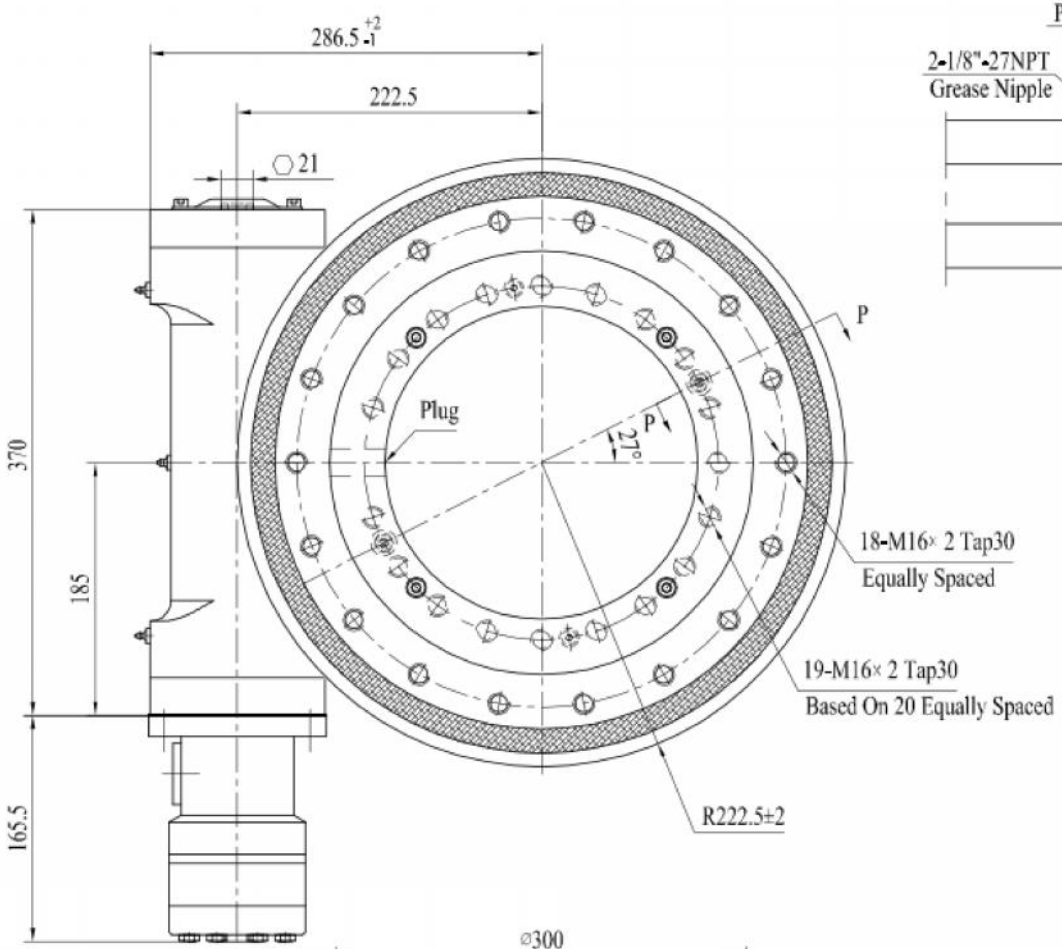

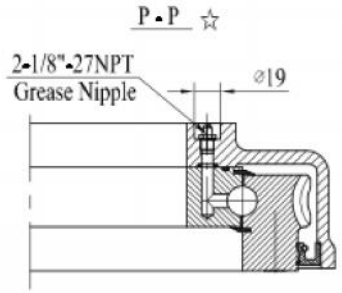

Worm Drive Performance Data		
Output Speed(Intermittent)	1.36 rpm	
Rated Output Torque	7.1 kN.m	5244 lbf.ft
Tilting Moment Torque （Max.）	57 kN.m	42.1×10^3 lbf.ft
Holding Torque	43 kN.m	31.7×10^3 lbf.ft
Axial Load （Max.）	760 kN	170.8×10^3 lbf
Radial Load （Max.）	280 kN	62.9×10^3 lbf
Ratio of Worm Gear	79:1	
Backlash	≤ 0.15 °	
Hydraulic Motor Performance Data		
Pressure	12 MPa	
Flow	20 L/min	

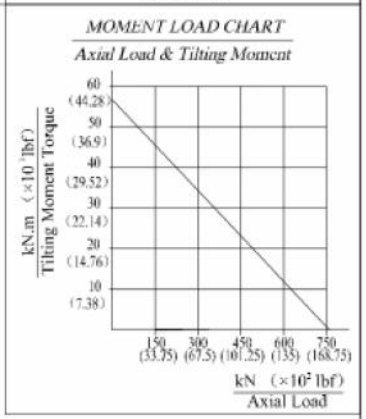

Hydraulic Motor Performance Data

BMRS160 [157.2cm³/rev.]

Flow(L/min)	Pressure (MPa) 5	7	9	10	12	14	continue (max.) 16	17.5	intermittent (max.) 20
5	104 26	146 23	190 20	210 16	245 10				
10	107 59	150 56	195 50	216 45	250 37	290 30	355 22		
20	102 121	151 118	198 115	220 113	257 108	298 102	342 97	370 90	420 78
30	97 184	146 178	190 173	217 170	256 164	295 155	340 143	368 128	416 103
40	89 246	140 241	185 235	210 228	252 220	290 210	335 194	363 177	412 150
50	72 310	128 307	179 300	202 295	244 287	284 278	327 262	358 247	409 210
continue (max.) 60	60 374	116 367	170 359	198 354	240 346	279 338	321 323	352 306	400 265
70	49 437	107 430	164 421	193 415	233 403	271 393	309 381	344 365	390 318
intermittent (max.) 75	36 472	98 463	152 450	185 441	226 431	265 420	300 405	334 389	379 365

Torque (N.m) 420
Speed (rpm) 78

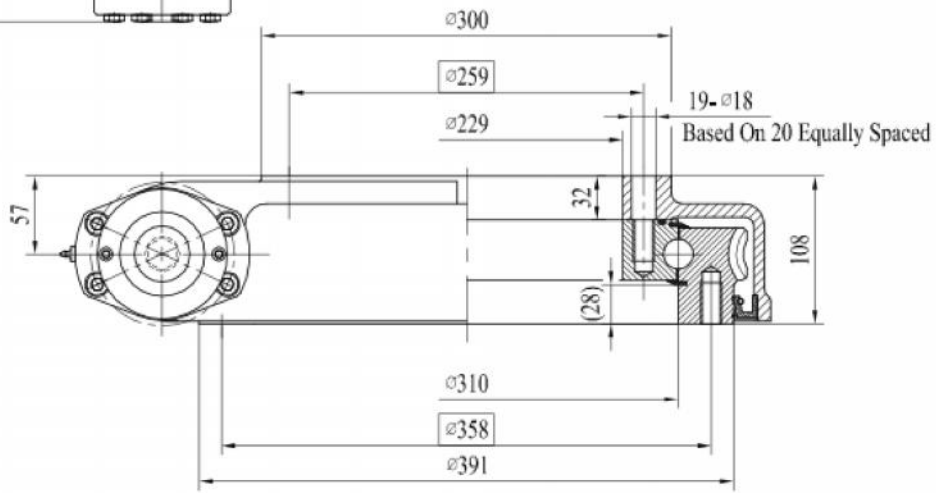

REV	DATE	REVISER	DESCRIPTION
DESIGNED BY	Jyden	03/13/2017	Eurograb Aanbouwdelen
CHECKED BY	Roddick	03/13/2017	
APPROVED BY	Sam	03/13/2017	

ALL PROPRIETARY RIGHTS IN THE SUBJECT MATTER HERE OF ARE RESERVED, AND NO PERMISSION IS GRANTED OR TO DISCLOSE REPRODUCE THIS PRINT IN WHOLE OR IN PART, ANY OF THE INFORMATION TO OTHERS.

WEIGHT	SCALE	Title	WORM DRIVE
	1:4	Model No.	WEA12
SIZE	A3	Part No.	79-HR-160-A-2224
SHEET	1 / 1	Rev	A

SYMBOLE ISO